Installation Instruction

WARNING

- Read all labels on product and instructions before installing fixtures.
- WARNING - Risk of fire or electric shock. LED Kit installation requires knowledge of luminaires electrical systems. If not qualified, do not attempt installation. Contact a qualified electrician.
- WARNING - Risk of fire or electric shock. Install this kit only in luminaires that have the construction features and dimensions shown in the photographs and/or drawings and where the input rating of the retrofit kit does not exceed the input rating of the luminaire.
- WARNING - To prevent wiring damage or abrasion, do not expose wiring to edges of sheet metal or other sharp objects.
- Do not make or alter any open holes in an enclosure of wiring or electrical components during kit installation.
- The recessed luminaire is intended for mounting only in a covered ceiling where only the led side of the luminaire will be exposed to damp or dry locations.
- INSTALLATION SHOULD ONLY BE PERFORMED AFTER POWER TO THE FIXTURE HAS BEEN DISCONNECTED.
- THIS RETROFIT KIT IS ACCEPTED AS A COMPONENT OF A LUMINAIRE WHERE THE SUITABILITY OF THE COMBINATION SHALL BE DETERMINED BY AUTHORITIES HAVING JURISDICTION.

Dimension and housing compatibility

Commercial downlight housing compatibility			
Model	Product size	Max luminous size	Cut-out size
VEKR9.5D/8T/27W-10V	Dia. 11.22” (285mm) x H 5.04” (128mm)	8.54” (217mm)	8.86” (225mm) - 10.43” (265mm)
VEKR9.5D/9T/40W-10V	Dia. 11.22” (285mm) x H 5.04” (128mm)	8.54” (217mm)	8.86” (225mm) - 10.43” (265mm)

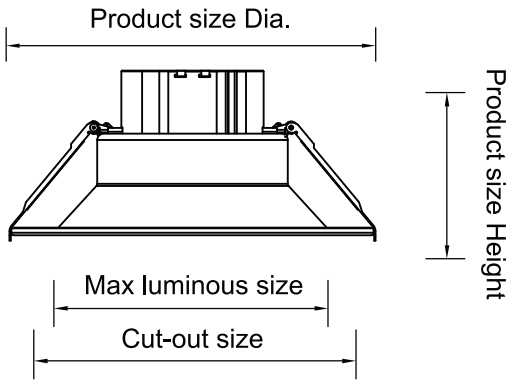

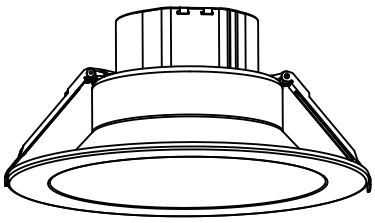

Installation Instruction

Installation

Figure 1

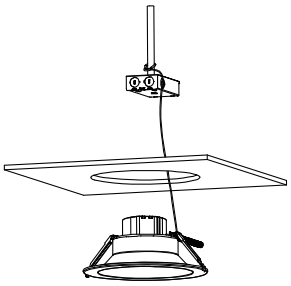

Figure 2

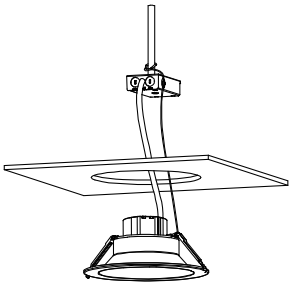

Figure 3

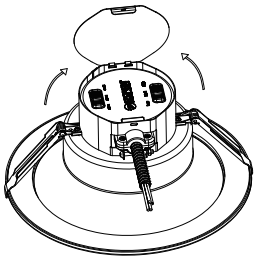

Figure 4

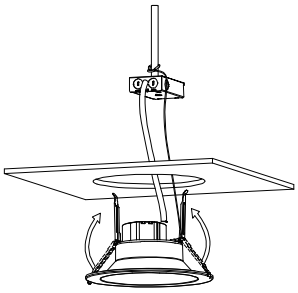

Figure 5

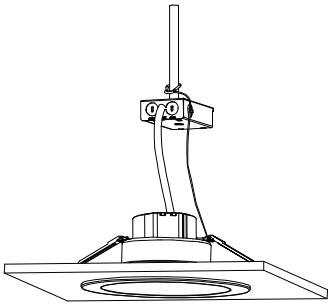

1. Make sure the POWER IS TURNED OFF at the source to the recessed housing in which you are installing the product.
2. Attach the carabiner safety clip to the existing fixture housing (Figure 1).
3. Insert lamp conduit into the J-box and wire to power source (black to hot, white to neutral, green to
4. ground, violet to 0-10V dimming positive, pink to 0-10V dimming negative) (Figure 2). Reattach J-box cover when done.
5. Open the metal enclosure, adjust the lamp power to desired lumen output and color temperature by sliding the selector switch .Then, close off the metal enclosure（Figure 3）.
6. Squeeze the two housing clips so they are in an upright position and insert lamp into the ceiling (Figure 4).
7. Once lamp is inside the ceiling, release the housing clips and continue pushing lamp into ceiling until securely fixed and flush (Figure 5).